EXAMPLE: QUESTION 5(b) 2012.

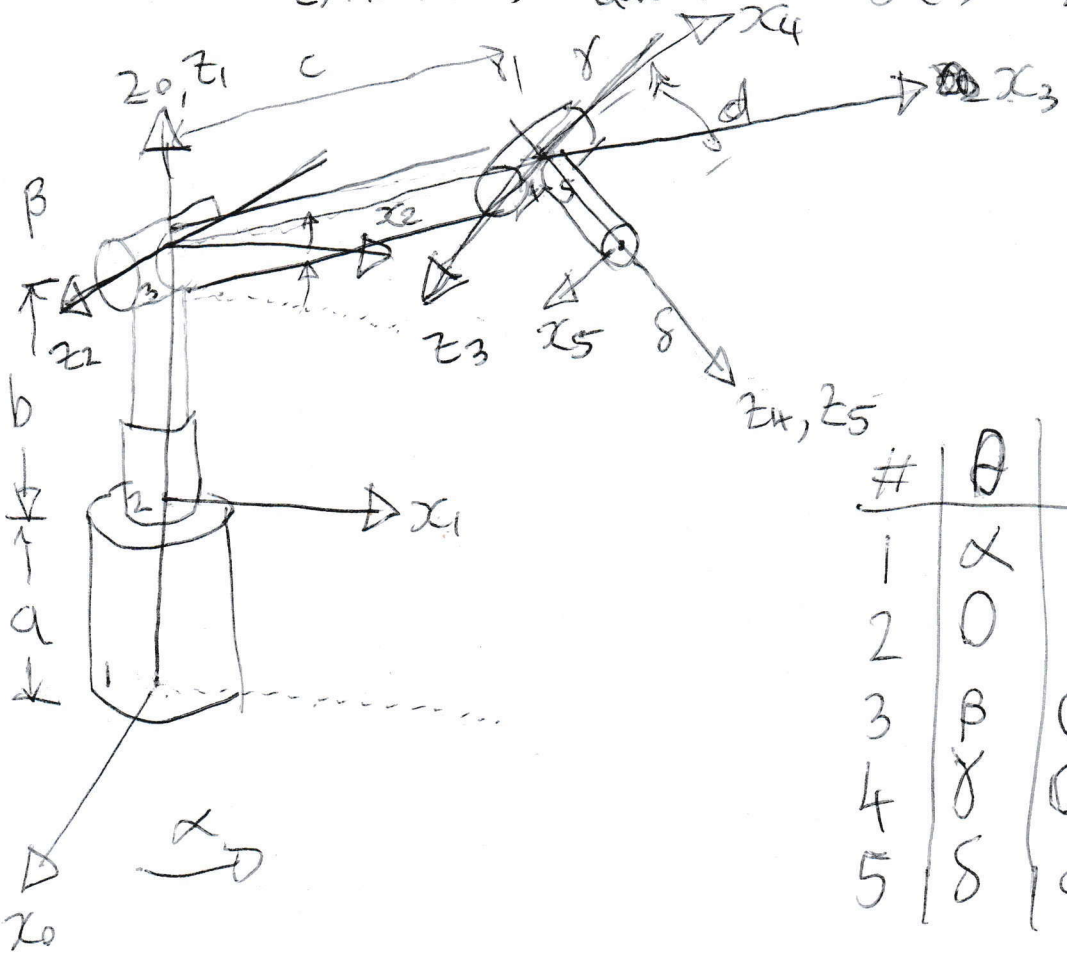

#	θ	d	a	α
1	α	a	0	0
2	0	b	0	90°
3	β	0	c	0
4	γ	0	0	90°
5	δ	d	0	0

$$A_1 = \begin{bmatrix} c\theta_1 & -s\theta_1 c\alpha_1 & s\theta_1 s\alpha_1 & a_1 c\theta_1 \\ s\theta_1 & c\theta_1 c\alpha_1 & -c\theta_1 s\alpha_1 & a_1 s\theta_1 \\ 0 & s\alpha_1 & c\alpha_1 & d_1 \\ 0 & 0 & 0 & 1 \end{bmatrix} = \begin{bmatrix} c\alpha & -s\alpha & 0 & 0 \\ s\alpha & c\alpha & 0 & 0 \\ 0 & 0 & 1 & a \\ 0 & 0 & 0 & 1 \end{bmatrix}$$

$$A_2 = \begin{bmatrix} 1 & 0 & 0 & 0 \\ 0 & 0 & -1 & 0 \\ 0 & 1 & 0 & b \\ 0 & 0 & 0 & 1 \end{bmatrix} \qquad A_3 = \begin{bmatrix} c\beta & -s\beta & 0 & c c\beta \\ s\beta & c\beta & 0 & c s\beta \\ 0 & 0 & 1 & 0 \\ 0 & 0 & 0 & 1 \end{bmatrix}$$

$$A_4 = \begin{bmatrix} c\gamma & 0 & s\gamma & 0 \\ s\gamma & 0 & -c\gamma & 0 \\ 0 & 1 & 0 & 0 \\ 0 & 0 & 0 & 1 \end{bmatrix} \qquad A_5 = \begin{bmatrix} c\delta & -s\delta & 0 & 0 \\ s\delta & c\delta & 0 & 0 \\ 0 & 0 & 1 & d \\ 0 & 0 & 0 & 1 \end{bmatrix}$$

$$A_{TOTAL} = A_1 . A_2 . A_3 . A_4 . A_5 = {}^{u}T_{H}$$

$$A_{TOTAL} = \begin{bmatrix} C\alpha & -S\alpha & 0 & 0 \\ S\alpha & C\alpha & 0 & 0 \\ 0 & 0 & 1 & a \\ 0 & 0 & 0 & 1 \end{bmatrix} \begin{bmatrix} 1 & 0 & 0 & 0 \\ 0 & 0 & -1 & 0 \\ 0 & 1 & 0 & b \\ 0 & 0 & 0 & 1 \end{bmatrix} \cdot A_3 \cdot A_4 \cdot A_5$$

$$= \begin{bmatrix} C\alpha & 0 & S\alpha & 0 \\ S\alpha & 0 & -C\alpha & 0 \\ 0 & 1 & 0 & a+b \\ 0 & 0 & 0 & 1 \end{bmatrix} \begin{bmatrix} C\beta & -S\beta & 0 & cC\beta \\ S\beta & C\beta & 0 & cS\beta \\ 0 & 0 & 1 & 0 \\ 0 & 0 & 0 & 1 \end{bmatrix} \cdot A_4 \cdot A_5$$

$$= \begin{bmatrix} C\alpha C\beta & -C\alpha S\beta & S\alpha & c.C\alpha C\beta \\ S\alpha C\beta & -S\alpha S\beta & -C\alpha & c.S\alpha C\beta \\ S\beta & C\beta & 0 & a+b+c.S\beta \\ 0 & 0 & 0 & 1 \end{bmatrix} \begin{bmatrix} C\gamma & 0 & S\gamma & 0 \\ S\gamma & 0 & -C\gamma & 0 \\ 0 & 1 & 0 & 0 \\ 0 & 0 & 0 & 1 \end{bmatrix} \cdot A_5$$

$$= \begin{bmatrix} C\alpha C\beta C\gamma - C\alpha S\beta S\gamma & S\alpha & C\alpha C\beta S\gamma + C\alpha S\beta C\gamma & c.C\alpha C\beta \\ S\alpha C\beta C\gamma - S\alpha S\beta S\gamma & -C\alpha & S\alpha C\beta S\gamma + S\alpha S\beta C\gamma & c.S\alpha C\beta \\ S\beta C\gamma + C\beta S\gamma & 0 & S\beta S\gamma - C\beta C\gamma & a+b+c.S\beta \\ 0 & 0 & 0 & 1 \end{bmatrix} A_5$$

$$= \begin{bmatrix} C\alpha . C_{\beta+\gamma} & S\alpha & C\alpha S_{\beta+\gamma} & c.C\alpha C\beta \\ S\alpha . C_{\beta+\gamma} & -C\alpha & S\alpha S_{\beta+\gamma} & c.S\alpha C\beta \\ S_{\beta+\gamma} & 0 & -C_{\beta+\gamma} & a+b+c.S\beta \\ 0 & 0 & 0 & 1 \end{bmatrix} \begin{bmatrix} C\delta & -S\delta & 0 & 0 \\ S\delta & C\delta & 0 & 0 \\ 0 & 0 & 1 & d \\ 0 & 0 & 0 & 1 \end{bmatrix}$$

$$= \begin{bmatrix} C\alpha . C_{\beta+\gamma} . C\delta + S\alpha S\delta & -C\alpha . C_{\beta+\gamma} . S\delta + S\alpha C\delta & C\alpha . S_{\beta+\gamma} & c.C\alpha C\beta + d.C\alpha S_{\beta+\gamma} \\ S\alpha . C_{\beta+\gamma} . C\delta - C\alpha . S\delta & -S\alpha . C_{\beta+\gamma} . S\delta - C\alpha C\delta & S\alpha . S_{\beta+\gamma} & c.S\alpha C\beta + d.S\alpha S_{\beta+\gamma} \\ S_{\beta+\gamma} . C\delta & -S_{\beta+\gamma} . S\delta & -C_{\beta+\gamma} & a+b+c.S\beta - d.C_{\beta+\gamma} \\ 0 & 0 & 0 & 1 \end{bmatrix}$$